A Finer Brew: Modeling and Fabrication of a Foam-Reducing Pump-Tap

Engineers: Shawn Hogan, Rob Lydon, Darren Wellner

Faculty Advisor: Col. Matt Hyre

The purpose of this report is to identify improvements in a traditional beer keg pump-tap in an attempt to minimize foam, or head, generation while the fluid is being dispensed. To accomplish this goal, the study focused on nozzle redesign to minimize the turbulence experienced by beer as it passes through the nozzle and comes in contact with a plastic cup. There were three major phases to the study that needed to be undertaken in order to successfully redesign the nozzle.

Phase I consisted of experimental data collection. In this phase, various measuring devices were constructed and used to test fluid properties that were used in subsequent phases of the study. Foam generation data was also collected to be used as a comparison with the redesign.

Figure 2. Experimental Setup

In Phase II, a computational fluid model of the standard tap was used to identify regions of turbulence generation. The standard tap geometry, to include cup, was created in Autodesk Inventor 10, a solid modeling program. The geometry was then imported into Gambit to create a mesh used by the finite volume analysis program Fluent to pinpoint potential areas for improvement.

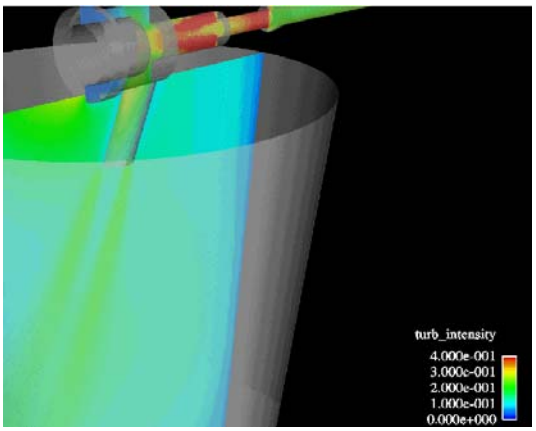

Figure 3. Nozzle-focused simulation

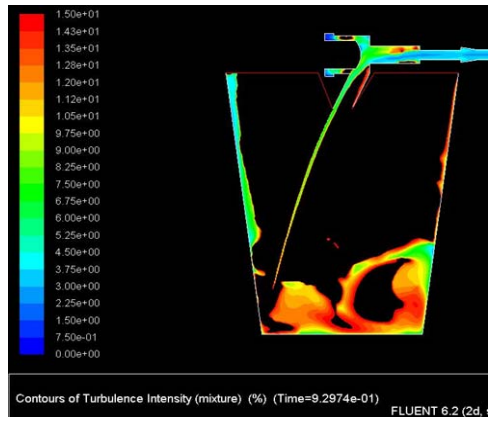

Figure 4. Cup turbulence intensity

Nozzle redesign and testing made up Phase IV of the study. Having identified geometry improvements to mitigate turbulence generation, a new nozzle was redesigned in Autodesk Inventor that altered the interior geometry of regions that experienced high turbulence. This final design was then installed in the original tap and hose assembly and physically tested to determine if less foam was generated in the cup.

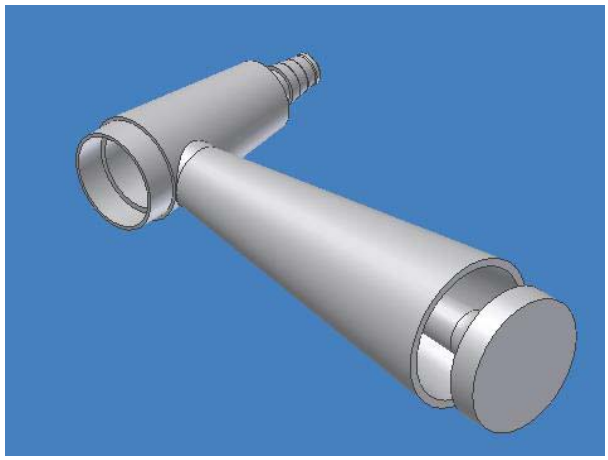

Figure 5. Nozzle Redesign