# The Heat Exchanger Assembly Project

Team Members: HuntBR
MinerSA
MillerZR
Client: Mr. Rob Griffin, Des Champs Technologies
Advisor: Colonel Hodges

The design project provided to VMI by Des Champs was focused on building heat exchangers. Des Champs currently assembles heat exchangers by inserting tubes into a frame by hand, one tube at a time. The objective of the design project was to develop a more efficient way to assemble the heat exchangers.

The design team evaluated multiple methods of tube insertion for the heat exchanger. Several methods were used to find the force required to insert a tube into the frame. An analytical approach, ANSYS model, hydraulic press, and free weights were used to determine the necessary force. The free weight and hydraulic press gave the most reasonable results; the average of the two methods was 7.75 lbs per tube. When a factor of safety of 1.6 was applied, it came to 12.4 lbs per tube. A buckling test was also done on the steel frame of the pressing machine. It was found that the frame could withstand well over ten times the amount of the weight needed to force the tubes in.
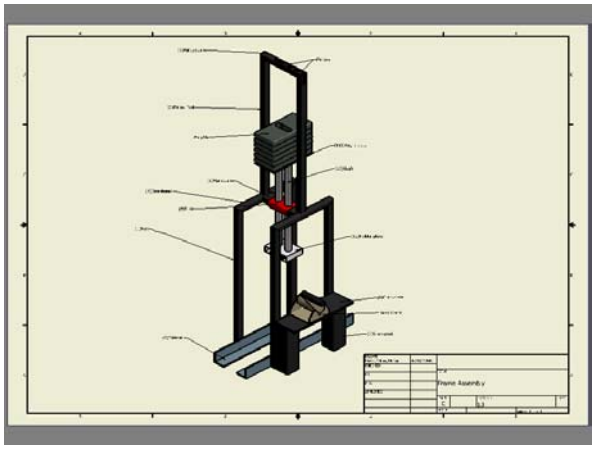
It is recommended that Des Champs use a press capable of inserting 20 tubes across at once on their full-size machine. The overhead crane would be a great method for moving the weight needed to press in the tubes since it is strong enough and already present in the factory. Finally, the guide funnels could be made out of plastic or some composite material to retain strength and rigidity while greatly cutting weight. These recommendations should provide an adequate solution to Des Champs need for a faster assembly process while still keeping costs low.