Rail Impact Analysis

Client: Jeff Dunn, PowerSystems International

Engineers: Dan Northcraft –Team Leader, Matt Sanders, Vinny Laorenza

Faculty Advisor: Major Matt Hyre

The Rail Impact Analysis Project, provided by the client, PowerSystems International Inc., attempts to model the forces applied to a trailer chained to a moving rail car as the rail car impacts stationary cars. Solid modeling and finite element analysis were used to determine the reactions and stresses on the trailer. Figure 1 shows the client provided 15.4-megabyte STEP formatted solid model of the trailer.

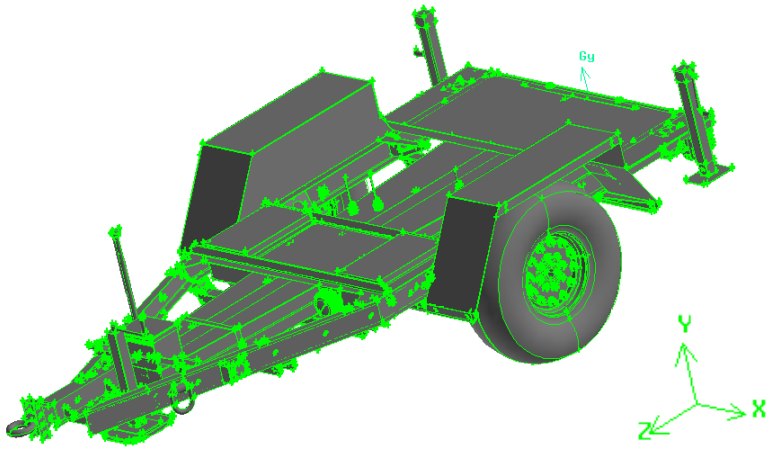

This model was overly detailed and a simplified model was created using a modeling and meshing program, Gambit (www.fluent.com), to make the finite element analysis computations small enough to run on VMI's computers. Components of the trailer were deleted from the model to achieve this goal. Any component of the trailer that was not load bearing was removed, as well as components that could be modeled as weight. To further simplify the analysis, the wheels and suspension assembly were removed; however, the loads were modeled using other means. A Tet/Hybrid mesh at an average size of 0.3 inches was then applied to the trailer. The mesh was exported to the finite element analysis program, ANSYS (www.ansys.com). After successfully loading the mesh into ANSYS, forces representing the deleted components, as well as the generator set, environmental control unit and other ancillary equipment were applied.

A differential equation was used to model the impact forces on the trailer, as well as the force transmitted through the suspension. These forces, plotted versus time, are shown in Figure 2.

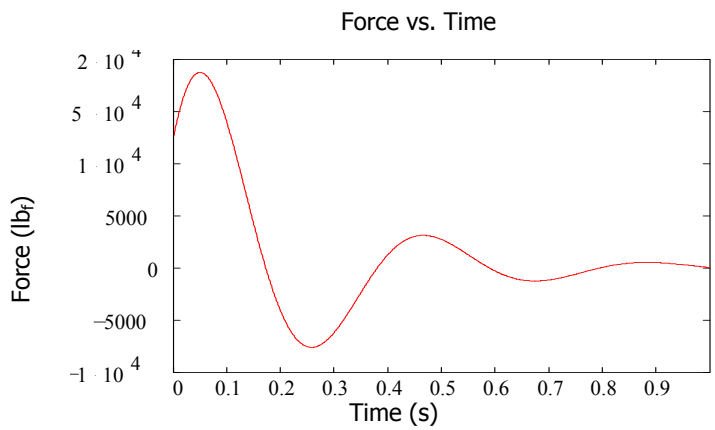

Figure 2. Force vs. Time Graph

The impact forces in the Y direction were input at the axle connection on the model and the impact forces in the Z direction were applied across the entire model. The model was then constrained at the four tie down rings and static and transient analyses were performed. The results of the transient analysis, shown in Figure 3, were then compared to the yield strength of the trailer to determine the trailer's success in the test.

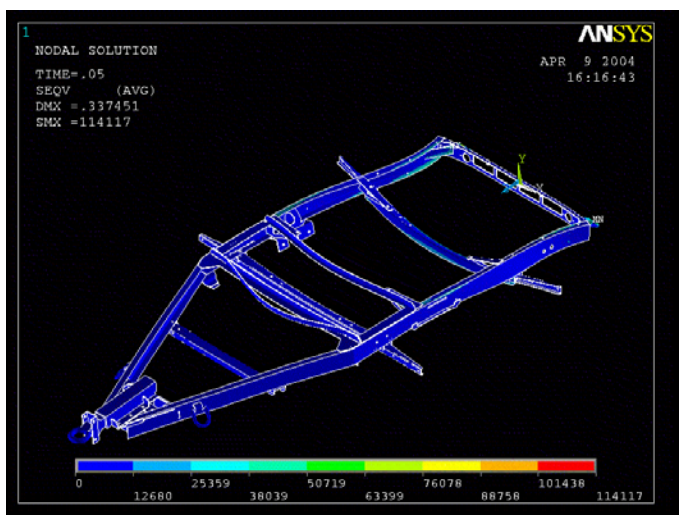

Figure 3. Transient Results