ME 444W-10: Mechanical Engineering Design

McQuay Chiller Test Stand Fluid Dynamics Model

Cadet Kyle R. Makinen (team leader)

Cadet Ying-Chie Hsieh

Advisor: Captain Robert McMasters

Found in 1872 in the United States, McQuay International has secured a niche in the global HVAC market. Recently bought out by Daikin Industries, a Japanese company, the future of McQuay and its product line are promising. One of its five locations in the United States is in Staunton, Virginia. Known especially for their quiet operation, superior indoor air quality and application adaptability, all of the McQuay chillers are designed and produced in Staunton. McQuay produces two types of chillers: air-cooled, with capacities ranging from 10 to 500 tons, and water-cooled, with capacities ranging from 30 to 2700 tons. With an expansive selection attractive to its customers, McQuay is continually developing new technologies to maintain the competitive edge of its varied product line. Before approving new designs, it is necessary to test the reliability and functionality of new combinations of chiller technologies. Testing is completed at the Staunton location on a set test stand piping system. The evaporator and condenser inlets and outlets of any chiller may be attached to this system. Heated water from the condenser loop is cooled using both evaporator outlet water and a cooling tower. In addition to pumps for the condenser and evaporator, there are two pumps that transfer water from the evaporator line to the condenser line and send heated condenser water to the cooling tower. Whenever a new chiller is attached, it is necessary to estimate the speeds of the various pumps to achieve the desired testing conditions. To this point, these speeds were determined by mere estimation, which is both a nuisance and can be a problem given erratic guesses. Given certain chiller characteristics and operating conditions, a worksheet can be devised in Excel to solve this estimation problem. Thus, the goal of this project is to solve for a more precise value for the variable speed of the tower and transfer pumps. To do so, experimental data and other measured system constraints were collected.

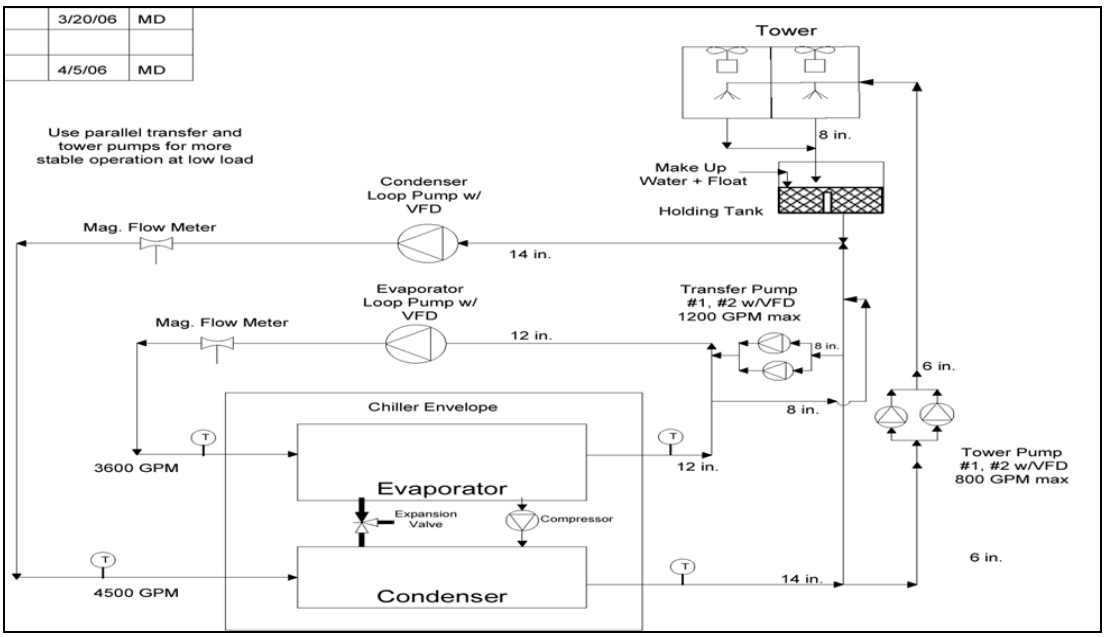

Figure 1. Original schematic

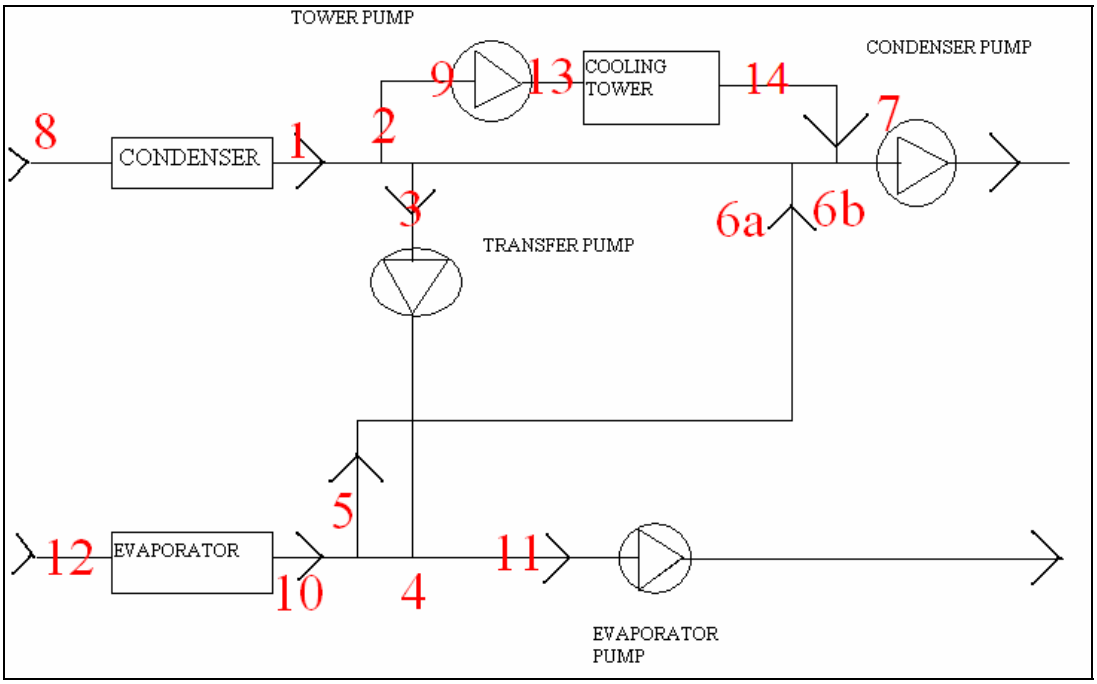

Figure 2. Redrawn schematic